paffoni Rubinetteria SpA	Description	One hole sink mixer high spout + pull out spray	
	Range	STICK	Code: SK185CRDW
	METAL PARTS IN CONTACT WITH WATER		

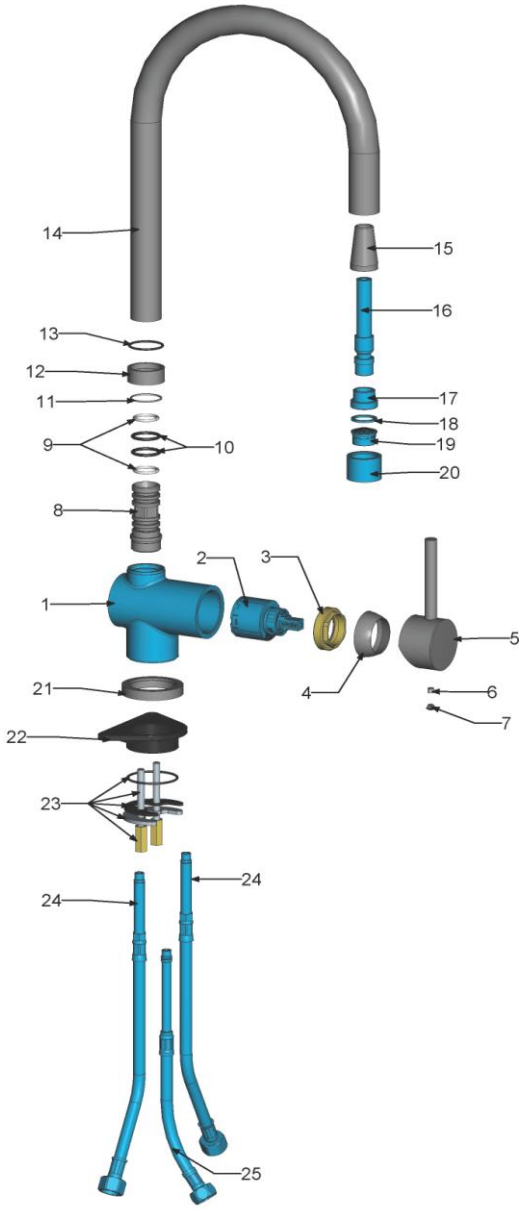

Item	CODE	DESIGNATION	Q.TY	MATERIAL	SUPPLIER	Wetted Area
1	**3011050**	**Mixer body**	**1**	**CW617N**	**-**	**3983 mm²**
2	**4071410**	**Complete cartridge Ø35**	**1**	**-**	**KEROX Kft.**	**3814 mm²**
3	2041630	Cartridge fastening	1	CW617N	-	
4	1000505	Metal underlever cover	1	CW617N	-	
5	4111160	STICK lever Ø45	1	UNI 3718 GpZnAl4 (Zama)	-	
6	2051108	M5x4 screw	1	INOX	-	
7	2091105	Lever button	1	ABS	-	
8	2041873	Spout connection	1	CW617N	-	
9	2091269	Cut ring 21,5x2,5	2	Resina acetalica naturale KP20	-	
10	2091065	Gasket 15,1x2,7	2	NBR70 ALIMENTARY	-	
11	2091242	White teflon ring	1	P.T.F.E.	-	
12	2041872	Nut for spout	1	CW617N	-	
13	2091327	Gasket 25x2	1	NBR70 ALIMENTARY	-	
14	2081121	Ø24 spout	1	CW508L	-	
15	2041624	Conical connection	1	CW617N	-	
16	**4071623**	**Flexible hose 150cm**	**1**	**-**	**M.R.G. S.r.l.**	**37417 mm²**
17	**2041625**	**Aerator connection**	**1**	**CW617N**	**M.B. di Marco Borella**	**414 mm²**
18	**2091318**	**Gasket 21x16x1,5**	**1**	**NBR70 ALIMENTARY**	**Morganti Ferruccio S.r.l.**	**366 mm²**
19	**2091104**	**Aerator cartridge**	**1**	**-**	**AMFAG S.r.l.**	**3924 mm²**
20	**2041637**	**Aerator body**	**1**	**CW617N**	**Zanetta F. & C. s.n.c.**	**699 mm²**
21	2041232	Brass base	1	UNI 3718 GpZnAl4 (Zama)	-	
22	2081126	ABS fixing base	1	ABS	-	
23	8001068	Fixing set	1	-	-	
24	**4071612**	**Flexible hose M8x1 G3/8**	**2**	**-**	**M.R.G. S.r.l.**	**12316 mm²**
25	**4071159**	**Flexible hose M8x1 M15x1**	**1**	**-**	**M.R.G. S.r.l.**	**3147 mm²**

TECHNICAL DRAWING

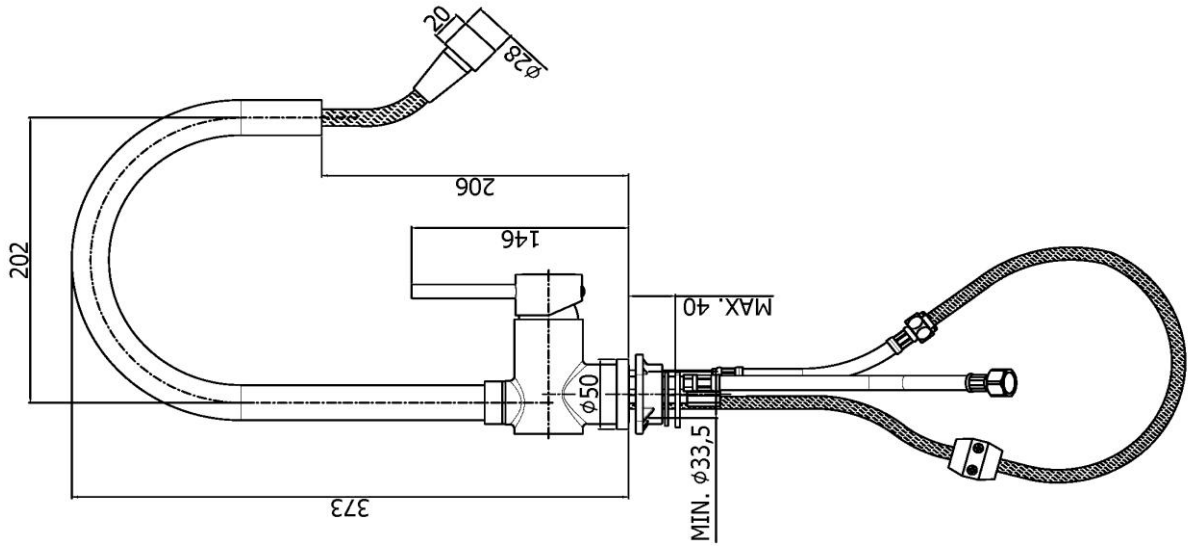

	Drawing				
Date	23/10/2015				
Name	Giampani				